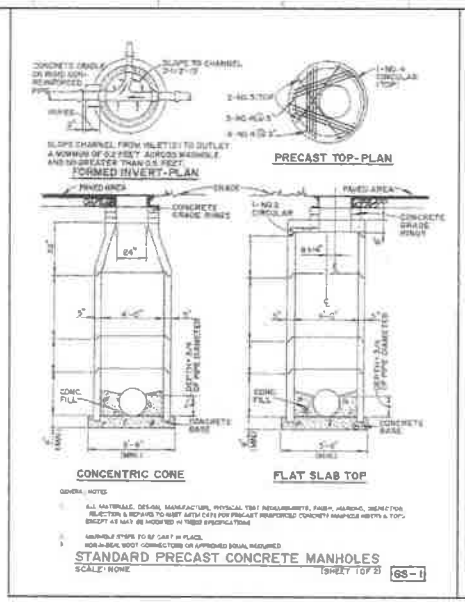

DETAIL 501

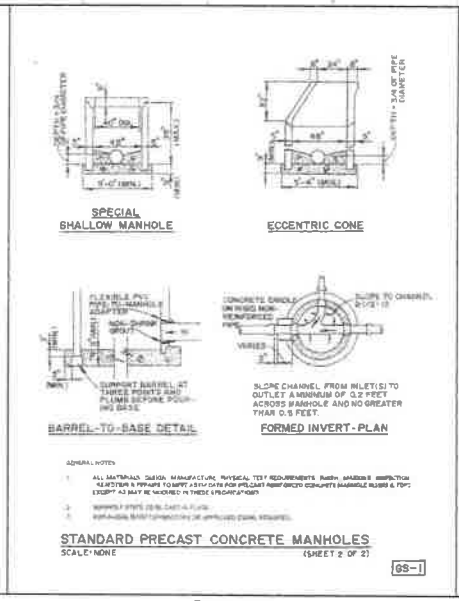

DETAIL 502

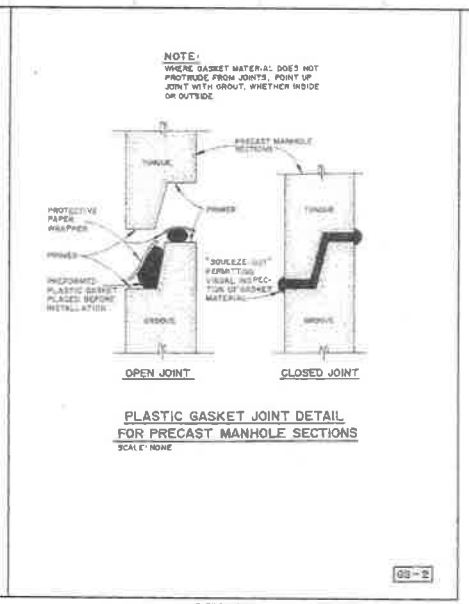

DETAIL 503

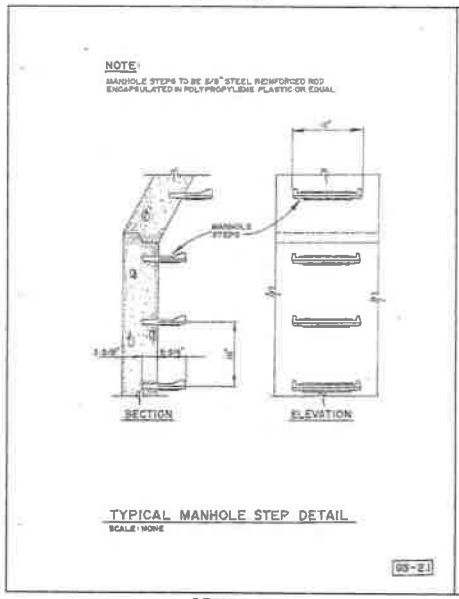

DETAIL 504

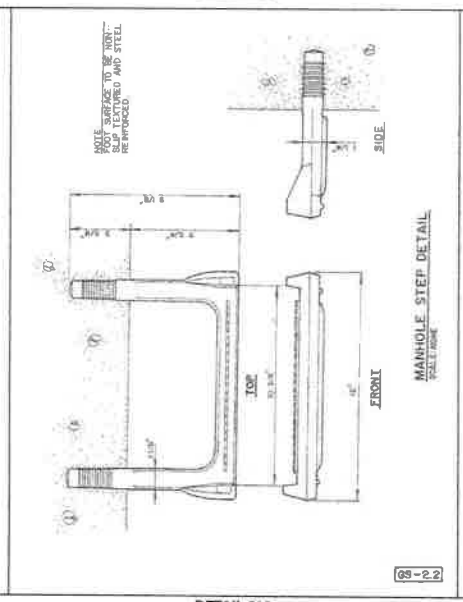

DETAIL 505

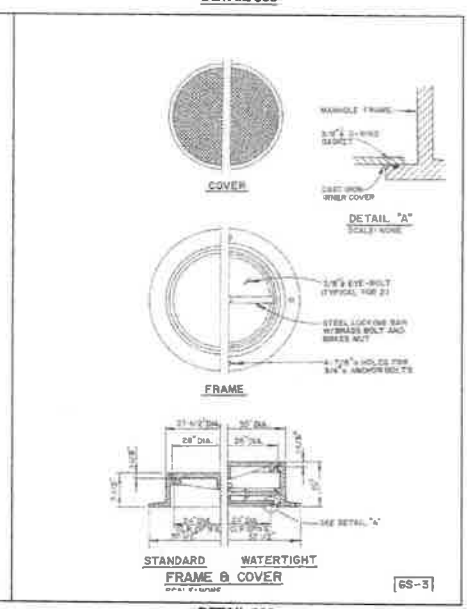

DETAIL 506

NOT FOR BID

NOTE TO CONTRACTOR:

THE CONTRACTOR SHALL REFER TO ALL PLANS WITHIN THIS PLAN SET. IT IS NOT THE ENGINEER'S INTENT THAT ANY SINGLE PLAN SHEET IN THIS SET OF DOCUMENTS FULLY DEPICT ALL WORK ASSOCIATED WITH THIS PROJECT.

REVISION RECORD

NO	DATE	DESCRIPTION

CEC
Civil & Environmental Consultants, Inc.
405 Duke Drive, Suite 270 · Franklin, TN 37067
615-333-7797 · 800-753-2326
www.cecinc.com

J.A. CURTIS COMPANIES, LLC
HORIZON CENTER
CITY OF SPRING HILL
MAURY COUNTY, TENNESSEE

DETAILS

DATE	DECEMBER 2, 2013	DRAWN BY	BPH
DESIGNED	AS NOTED	CHECKED BY	JLW
PROJECT NO.			133-453
APPROVED BY			JLW

PROJECT NO.
C802

WPC13-0768